Bar Accessories

Replacement Lavatory Grid Strainer Extension Pipe - 4.5"

C9512

Option Available

Part No	Length	Finish
C9513	5"	Polished Chrome
C9514	6"	Polished Chrome

Product Dimensions:-

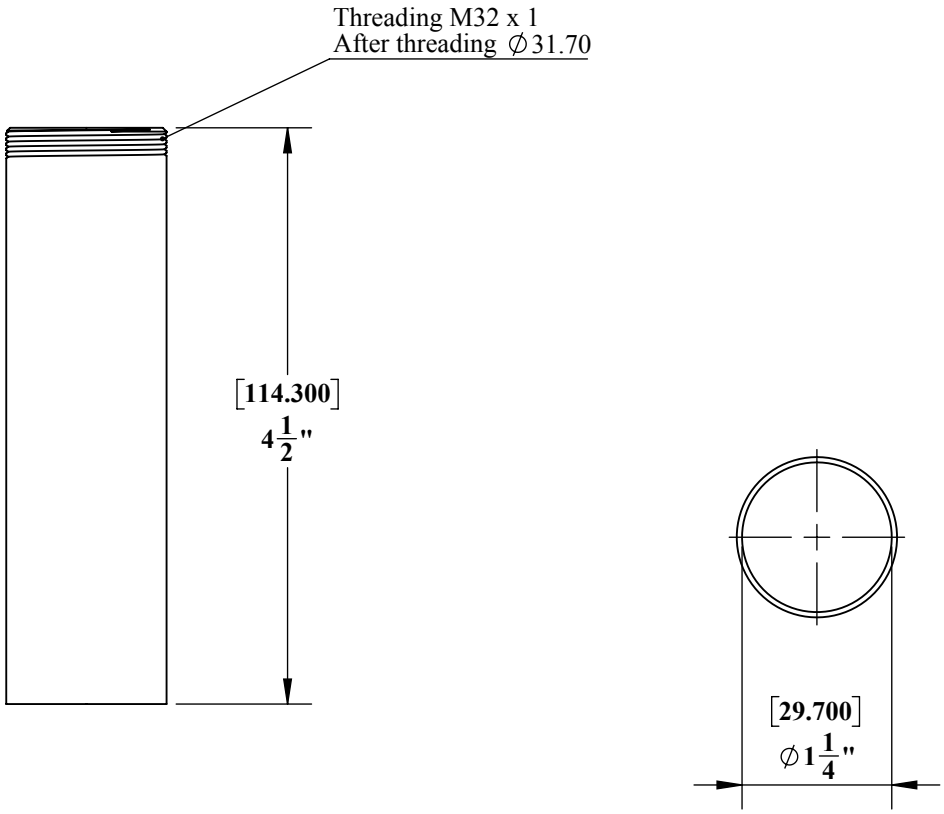

Copyright © 2017 Krome USA Inc. All Rights Reserved