Pre Rinse Faucet & Accessories

Cartridge (COLD) for Manual Faucet

C8164

Option AVailable:-

Part No	Part Name
C8163	Cartridge (HOT) for Manual Faucet

Product Dimensions:-

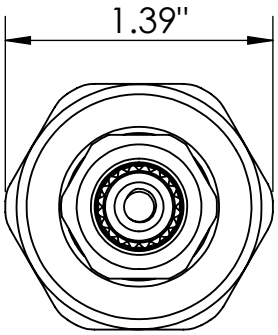

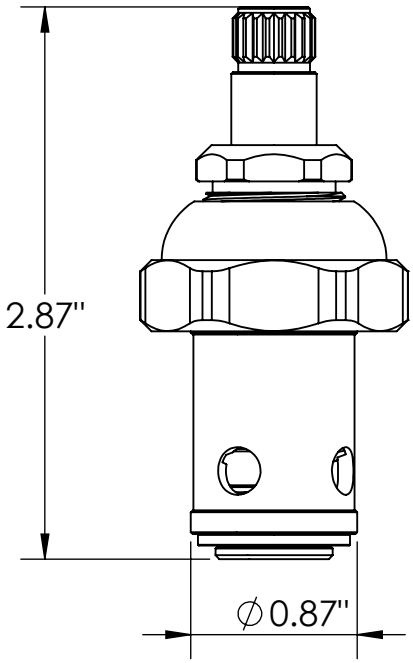

Copyright © 2017 Krome USA Inc. All Rights Reserved

US & Canada :- +1-678 666 2001
Asia:- +91-9814203010

Krome USA Inc. reserves the right to make revisions to product specifications without any notice
For most updated specification sheet , go to www.aluids.com