PART NO.-	C8451 line drawing	TITLE-	Single Hole Single Temperature Commercial Deck Mount Faucet , Lever Handle , 5 1/2" Rigid Gooseneck w/stream regulator & 1/2" NPSM Male Inlet - Lead Free Brass

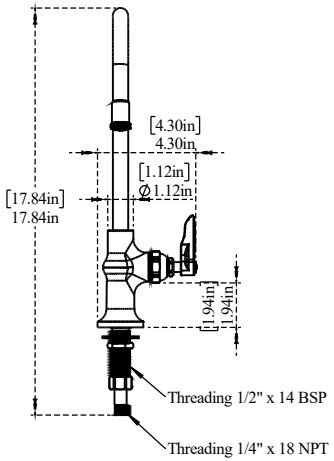

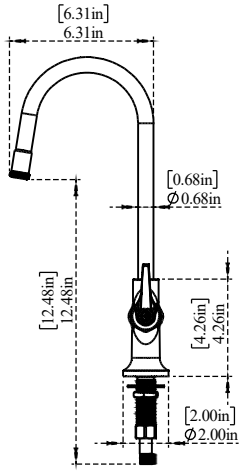

ALUIDS

Note:- Information provided for reference only

* This document and the information thereon is the property of Krome Dispense Pvt Ltd. &its subsidiaries. Any reproduction in part or as a whole without the written permission of Krome Dispense Pvt Ltd. is prohibited.