Food Service Parts

Full Flow Stream Regulator

Aerator,Aerator Holder and Rubber washer Sub-Assembly

C8202.50

ItemNo.	Part No.	Part Name	Qty.
1	C8202.02	Aerator Holder	1
2	C8202.03	Aerator	1
3	C8202.04	Rubber Washer	1

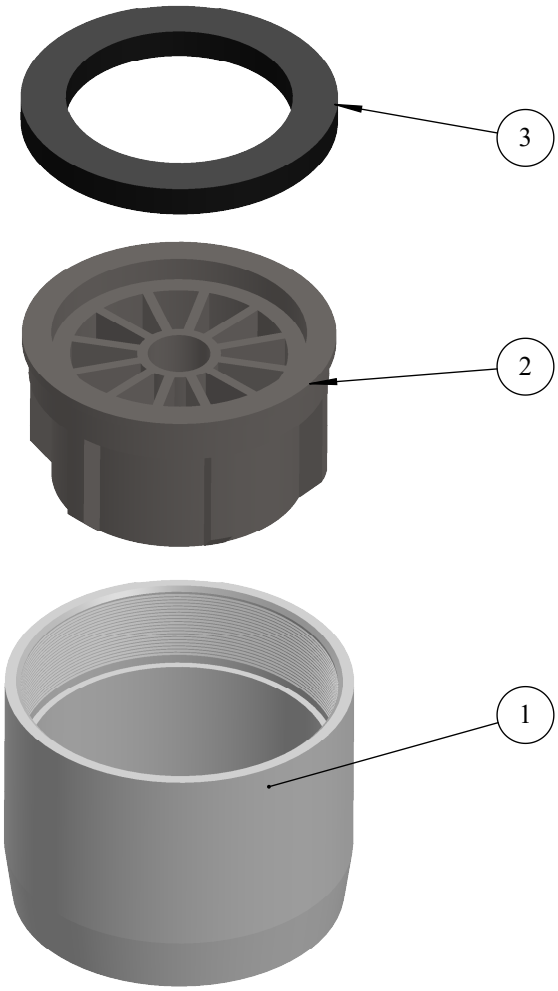

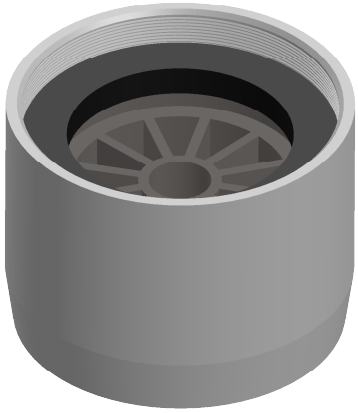

Copyright © 2017 Krome USA Inc. All Rights Reserved

US & Canada :- +1-678 666 2001
Asia:- +91-9814203010

Krome USA Inc. reserves the right to make revisions to product specifications without any notice
For most updated specification sheet , go to