Pre Rinse Units

8” Center Wall Mount Space Saver Pre-Rinse -1.42 GPM

C8466

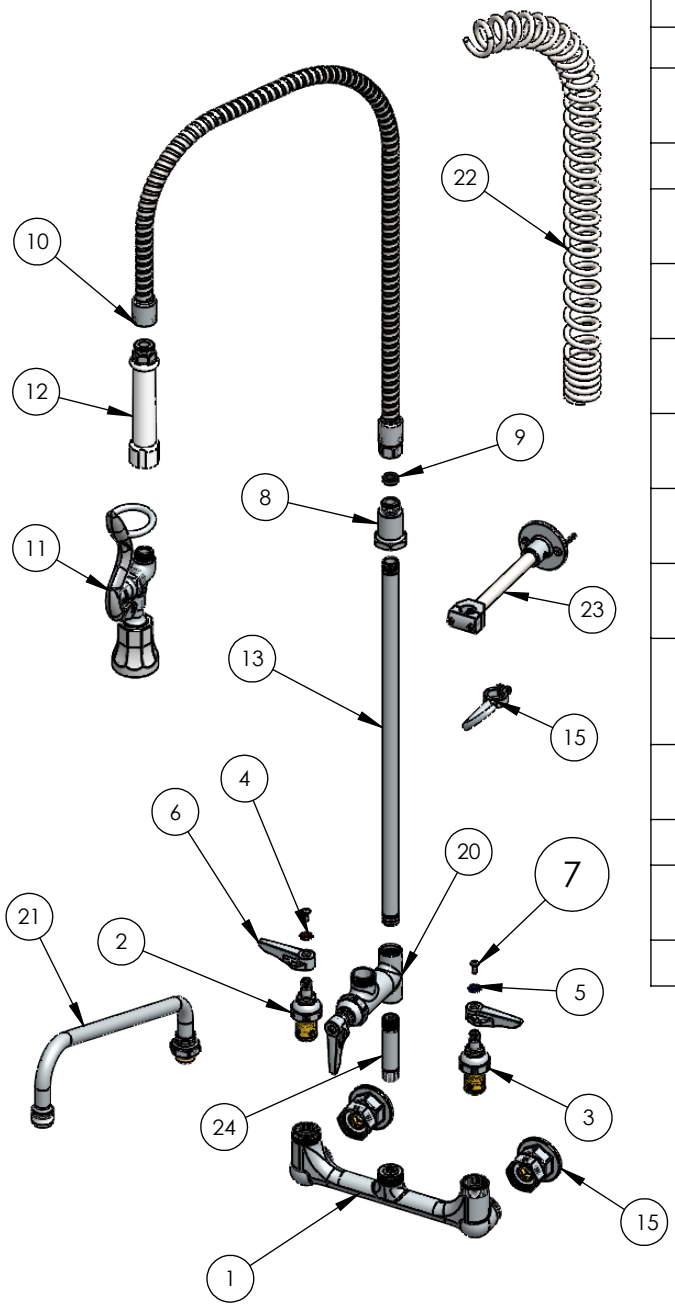

ItemNo.	Part No.	Part Name	Qty.
1	C8241.01	Pre Rinse Body	1
2	C8134	Spindle Assembly Hot (RH)	1
3	C8138	Spindle Assembly Cold (LH)	1
4	C8136	Hot Index (Red)	1
5	C8137	Cold Index (Blue)	1
6	C8135	Lever	2
7	C8139	Oval (Raised Head) Nylock Screw for Handle	2
8	C8126	Spring Holder	1
10	C8244	44" SS Flexible Pipe assembly, Less Handle	1
11	C8042	Low Flow Spray Valve For Pre Rinse 1.2 GPM	1
12	C8042.21	Extention for Pre Rinse Spray Head	1
13	C8062.01	18" Long x 3/8" MPT Rinser Tube	1
	C8121	1/2" NPT Female Eccentric Flange assembly with washer	2
15	C8066	Pre Rinse Spray Head Rinser Tube Hook	1
20	C8173.50	Add-On faucet Body with Quarter-Turn Eterna Cartridge and Lever Sub-assembly	1
21	C8145.01	12" Swing Nozzle with Stream regulator Outlet	1
22	C8129	Spring for Pre Rinse	1
23	C8075	6" Wall Mount Bracket for Upright Pre-Rinse	1
24	C8173.01.02	Nipple, 3/8" NPT x 3"	1

Copyright © 2017 Krome USA Inc. All Rights Reserved

US & Canada :- +1-678 666 2001
Asia:- +91-9814203010

Krome USA Inc. reserves the right to make revisions to product specifications without any notice
For most updated specification sheet , go to